LACELA

Product:Electric Blower Art.No.272804

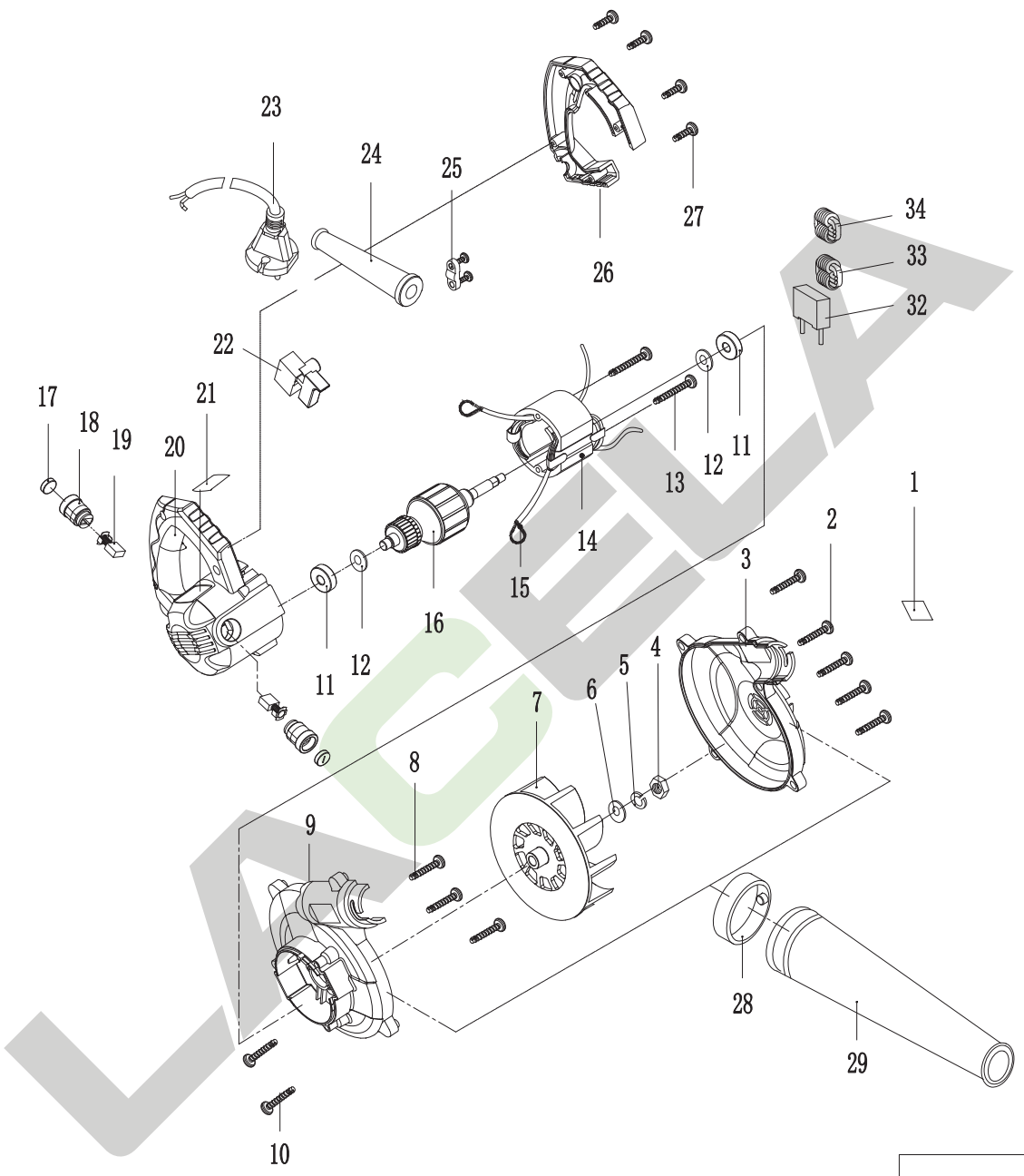

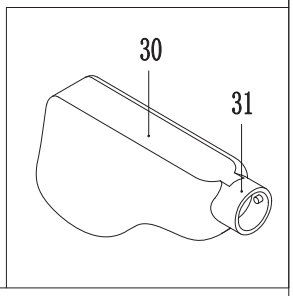

Version No.	D	Enable Time	2022.9

LACELA

Product:Electric Blower Art.No.272804

No.	Part Name(Chinese)	Part Name(English)	Code	Qty	No.	Part Name(Chinese)	Part Name(English)	Code	Qty
1	商标	Trademark	20402007114	1					
2	自攻螺钉ST4×14	Screw ST4×14	30202019	5					
3	导风罩盖	wind scooper cover	10101005137	1					
4	六角螺母M6	Screw M6	30501058	1					
5	弹性垫圈 6	elastic washer 6	30401012	1					
6	平垫片6.2×12×0.8	flat washer	30403058	1					
7	风叶	fan	10510001002	1					
8	自攻螺钉ST5×30	Screw ST5×30	30202067	3					
9	导风罩	wind scooper	10101005136	1					
10	自攻螺钉ST4×10	Screw ST4×10	30202013	2					
11	轴承608-2Z	bearing 608-2Z	30104024	2					
12	平垫片8×17×0.5	flat washer 8×17×0.5	30403079	2					
13	自攻螺钉ST5×35	Screw ST5×35	30202068	2					
14	定子	stator	10501001180	1					
15	拉簧	tension spring	10607001004	2					
16	转子	armature	10502001194	1					
17	刷握盖	bursh holder cover	10606001143	2					
18	刷握	Brush Holder	10606001142	2					
19	碳刷5×8	Carbon Brush	10605001102	2					
20	机壳	Housing	10101001252	1					
21	铭牌	name plate	20302007426	1					
22	开关	switch	10601001167	1					
23	电源线2×0.75	cord 2×0.75	10602006130	1					
24	电缆护套	Cord Sleeve	10102001043	1					
25	电缆压板	The cable clamp	10101011123	1					
26	手柄盖	handle cover	10101004446	1					
27	自攻螺钉ST4×16	Screw ST4×16	30202022	4					
28	大套圈	big ring	10101005128	1					
29	出风管	Rubber wind mouth	10101005127	1					
30	集尘袋	dust bag	21201010025	1					
31	小套圈	small ring	10101005131	1					
32	电容	Capacitance	10603001005	1					
33	电感	Lnductance	10604001058	1					
34	电感	Lnductance	10604001059	1					
Version No.		D			Enable Time		2022.9		

LACELA